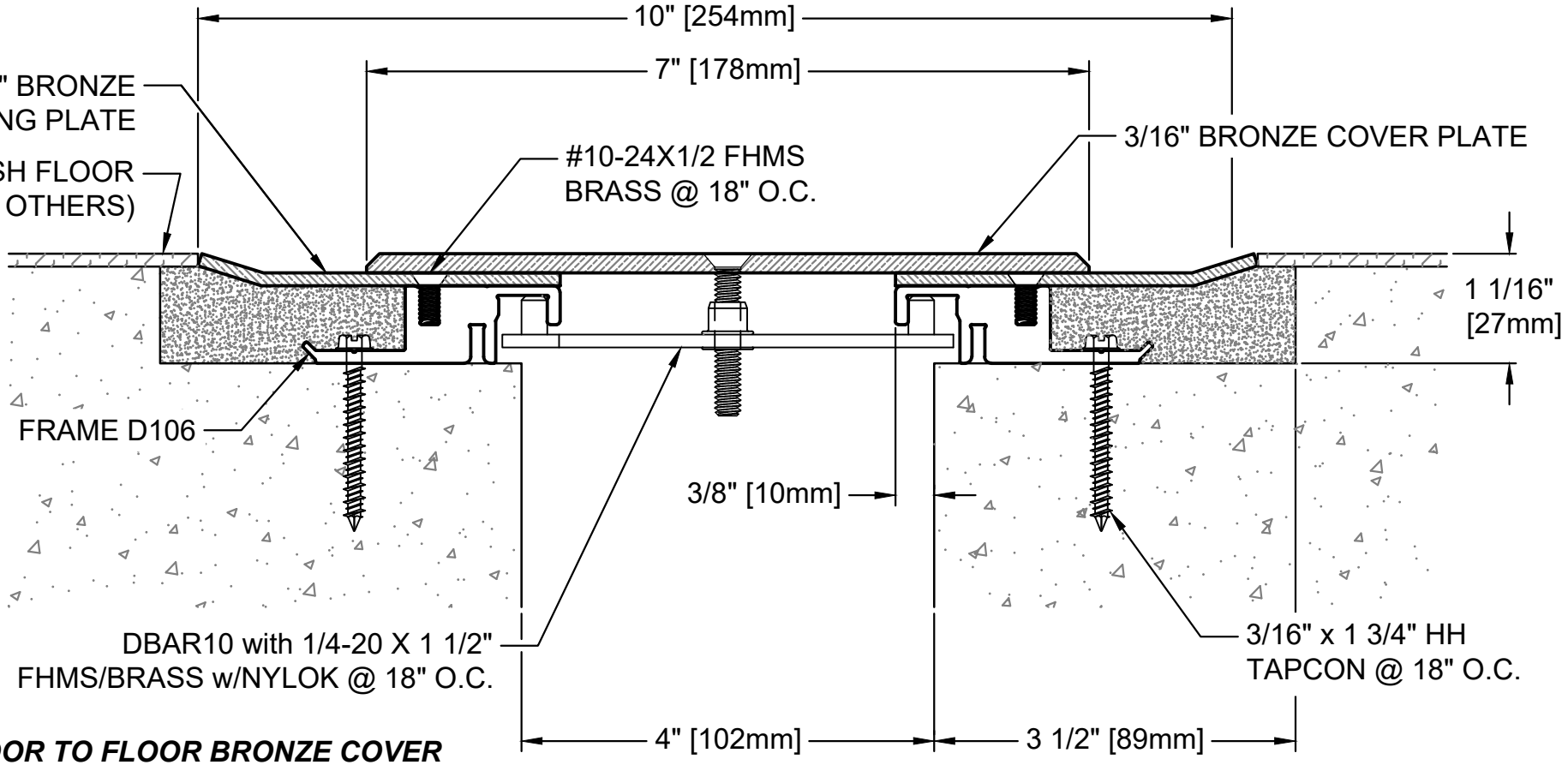

FLOOR TO FLOOR BRONZE COVER

ALUMINUM: 6063-T5 EXTRUSION
BRONZE: 280 ALLOY MUNTZ METAL
EXPOSED FINISH: #3 SATIN
MOVEMENT: +/- 50% JOINT WIDTH
STOCK LENGTHS: 10'-0"

D40-11-31

CUSTOMER:	PROJECT:	LOCATION:

Architectural Art
MANUFACTURING
Division of Pittcon Architectural Metals, LLC
PH: 706-387-0062 FAX: 706-387-0089
TOLL FREE: (800) 835-0028 ***web: www.archart.com***

FLOOR TO FLOOR BRONZE COVER SYSTEM

DRAWN BY: LAP	SCALE: NTS
DATE: 04/08/20	
APPROVED BY:	DRAWING #: D401131-001
DATE:	

NO.	REVISIONS	BY	DATE

The information contained herein is the propriatory property of **ARCHITECTURAL ART MFG.**, Division of Pittcon Architectural Metals, LLC. No portion of it may be reproduced by any means or used in any form except for the purpose for which it was furnished. All rights of design and invention are hereby reserved. We reserve the right to make changes in the design at our discretion without notice.